LiGHT SKY

www.lightsky.com.cn

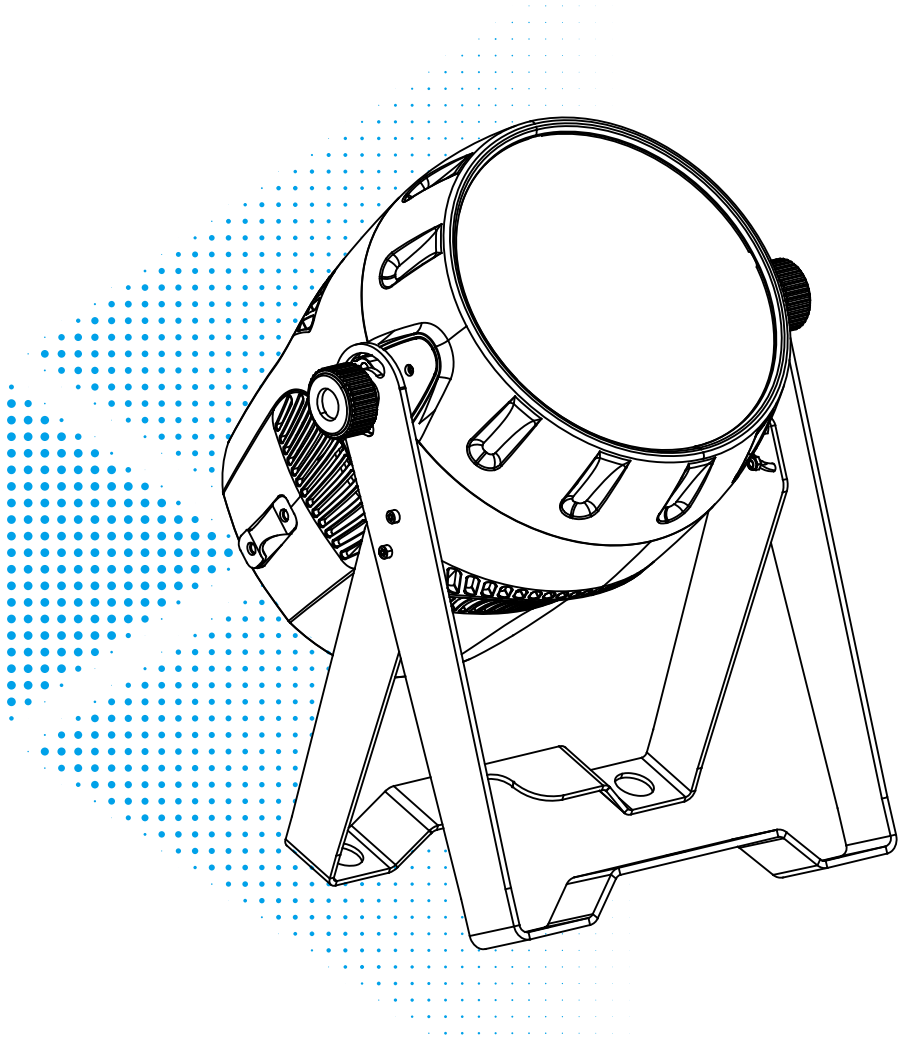

PL1215 II

User Manual

Please read the instruction carefully before use

Fly Dragon Lighting Equipment Co., Ltd.

Add : NO.4 JINGNENG ROAD 1, HUADU DISTRICT, GUANGZHOU, CHINA.
Tel : 020-61828288 Fax : 020-61828188 Postal Code : 510820
Email : flydragon@lightsky.com.cn

Social Media

LiGHT SKY Wechat

Contents

1. Safety information....2
2. Technical information....4
3. Attachment and body size....5
4. Installation and connecting....7
5. Control panel....10
6. Menu setting....11
7. Channel function....13
8. Circuit connecting diagram....14
9. Cleaning and maintenances....15
10.Troubeshooting....16
11.Duty exonerative and copyright protection....17

Congratulations on choosing our company product! We thank you for your custom.

- ◆Please note that this product, as all the others in the rich my company range, has been designed and made with total quality to ensure excellent performance and best meet your expectations and requirements.
- ◆Carefully read this user manual in its entirety and keep it safe for future reference. It is essential to know the information and comply with the instructions given in this manual to ensure the fitting is installed, used and serviced correctly and safely.
- ◆My company disclaims all liability for damage to the fitting or to other property or persons deriving from installation, use and maintenance that have not been carried out in conformity with this user manual, which must always accompany the fitting.
- ◆My company reserves the right to modify the characteristics stated in this user manual at any time and without prior notice.

SAFETY INFORMATION



■This lighting fixture is for professional use only - it is not for household use.

■Installation

Make sure all parts for fixing the projector are in a good state of repair.
Make sure the point of anchorage is stable before positioning the projector.
The safety chain must be prgperly hooked onto the fitting and secured to the framework.
When suspending the fixture, ensure that the supporting structure and all hardware used can hold at least 10 times the weight of all the devices they support.





■Mounting surface and fire protection

Please do not install the fixture onto combustible surface.
Keep all combustible materials at least 20 cm away from the fixture.
Ensure a minimum clearance of 0. 2m around the cooling fans and ventilation.
Do not expose the front glass to sunlight or other strong light source from any angle.
Lenses can focus the sun's rays inside the fixture, creating a potential fire hazard.

ta 40℃

■Maximum ambient temperature

This fixture is suitable for indoor use and wet locations. Do not immerse in water.
The ambient temperature Ta: −20℃～40℃.



■Protection against electrical shock

Connection must be made to a power supply system fitted with efficient earthing (**Class I** appliance according to standard EN 60598-1).
It is,moreover, recommended to protect the supply lines of the projectors from indirect contact and/or shorting to earth by using appropriately sized residual current devices.





■Connection to mains supply

The double insulation between the LV power supply and the control conductor on the fixture.
Connection to the electricity mains must be carried out by a qualified electrical installer.
Check that the mains frequency and voltage correspond to those for which the projector is designed as given on the electrical data label.
This label also gives the input power to which you need to refer to evaluate the maximum number of fittings to connect to the electricity line, in order to avoid overloading.
Don't use the power cable when the insulation is damaged.
It must be the manufacturer or distributor or the professional person to change the damaged power cable in order to avoid any dangerous.



■Temperature of the external surface

The maximun temperature that can be reached on the external surface of the fitting, in a thermally steady state,is 80℃。
Avoid contact bypersons and materials.
Allow the fixture to cool for at least 5 minutes before handling.



■Maintenance

Before starting any maintenance work or cleaning the projector, cut off power from the mains supply.
After switching off, do not remove any p



■The light source

The light source in this fixture shall be replaced by the manufacturer or its service agent or similar qualification.
Always disconnect from mains before replacing the light.



■Protection against explosion

The protection screen, lens or ultraviolet screen on the lamp can be damaged to the degree of failure if visible damage, such as a crack or deep mark, should be replaced。



■Protection optical radiation

Never look directly into the light source. You risk injury to your retina, which may induce blindness.

Do not look at LEDs with magnifiers, telescopes, binoculars or similar optical instruments that may concentrate the light output.



APPROVALS

- The product implementation standard: IEC 60598-1、IEC 60598-2-17
- Approved certifications: CE、RoHs
- The product complies with the following EU directives:
  Low Voltage Directive 2014/35/EU . EMC Directive 2014/30/EU

TECHNICAL INFORMATION

- **Power supplies available** ： AC100~240V 50/60Hz
- **Power** ：157W / PF 0.96 1.6A
- **Light Source** ： TYANSHINE 15W, RGBW 4 in 1 LED chip.
- **LED QTY**：12PCS.
- **Average life**：30000h
- **Lens & Zoom**：High precision combination lens,linear adjustment.
- **Beam angle**：Zoom function min.7°， max.55°
- **Color**：RGBW macro color system.
- **CCT**：Color temperature adjustable range: 2500～10000K
- **CRI**：Ra ≥75
- **Material of lens** ： PMMA
- **Strobe**：1-30 times/second electronic strobe and random strobe.
- **Dimmer**：Electronic dimmer，provides four dimming options.
- **Control Mode** ： DMX512, RDM.

- **Channel** ： standard mode 10CH, simple mode 5CH
- **Software upgrade** ： Update via DMX link Channel.
- **Display Menu** ：
  - The display panel adopts a 0.9-inch OLED screen,which is used in both Chinese and English languages to facilitate quick operation and browse menus.
  - Display board can record device's using time , show device's temperature, channel data and software version .
- **IP protection level**：IP66
- **Safety Devices** ： Bipolar circuit breaker with thermal protection.
- **Cooling** ： Natural heat dissipation.
- **Outlooking** ： Housing with high pressure engineering plastic, anti-UV, anti-high temperature and anti-aging.
- **Light size** ： 334X242X432MM

  N.W. : 7.2Kg
- **Box Size** (1 sets)：330X330X475MM

  N.W.: 7.2Kg G.W.: 9.2Kg
- **Box Size** (4 sets)：685X685X500MM

  N.W.: 28.4Kg G.W.: 37.2Kg
- **Flycase Size** (6 sets)：915X795X630MM

  N.W.: 43.2Kg G.W.: 82.5Kg

Distance, spot diameter and illumination diagram

55° Lux(fc)	R	195(18)	62(6)	32(3)	18(2)
	G	467(44)	131(12)	75(7)	41(4)
	B	19(2)	5(0.5)	3(0.3)	1(0.1)
	W	589(55)	162(15)	92(9)	50(5)
	RGB	1035(96)	184(17)	98(9)	58(5)
	RBGW	841(78)	339(31)	180(17)	99(9)
7° Lux(fc)	R	2250(209)	861(80)	510(47)	226(21)
	G	5200(483)	2185(203)	1178(109)	551(51)
	B	200(19)	90(8)	50(5)	23(2)
	W	6250(581)	2734(254)	1500(139)	700(65)
	RGB	6900(641)	2912(271)	1630(151)	782(73)
	RBGW	12650(1176)	5510(512)	3060(284)	1405(131)

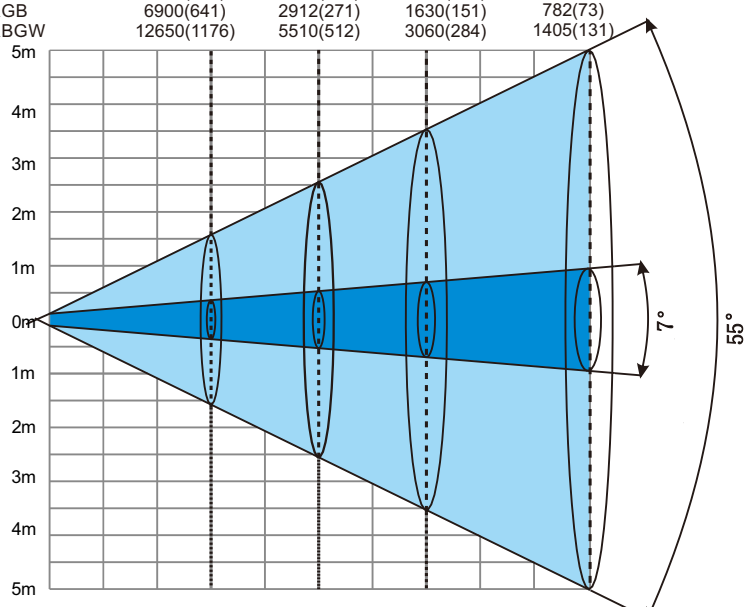

Distance	m(ft in)	0	3(9'10")	5(16'5")	7(23')	10(32'10")
7°Diameter	m(ft in)		0.9(2'11")	1.4(4'7")	1.8(5'11")	2.2(7'3")
55°Diameter	m(ft in)		3.1(10'2")	5(16'5")	7(22'12")	10(32'10")

ATTACHMENT AND BODY SIZE

1

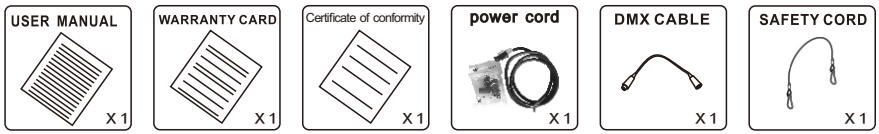

Attachment contents- Fig. 1

2

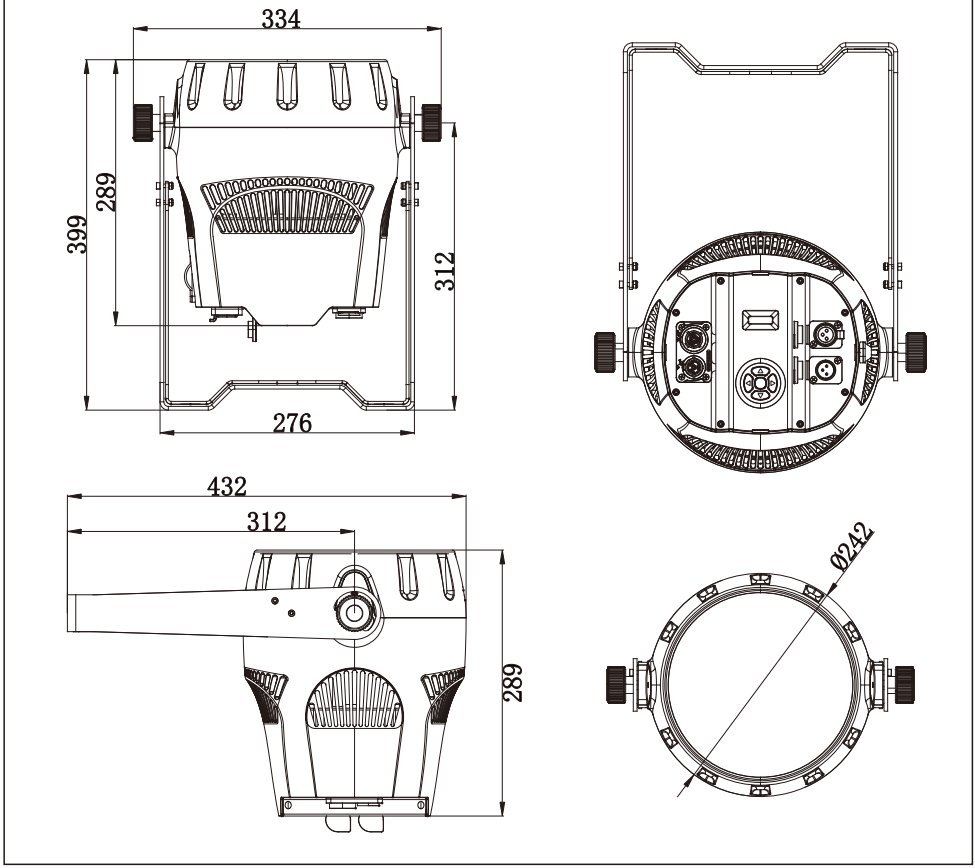

Body Size---Fig 2

INSTALLATION AND CONNECTING

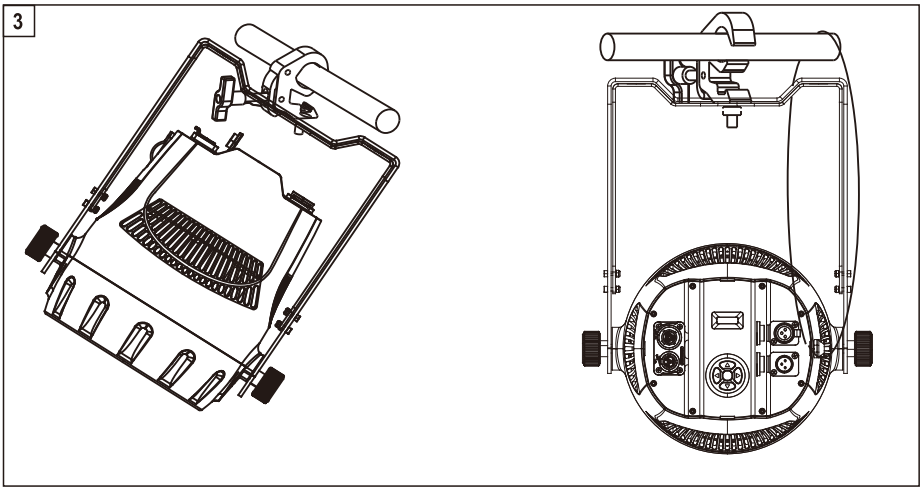

Installing the projector- Fig. 3

The projector can be installed on the floor resting by means of brackets, on a truss or on the ceiling or wall.
WARNING:with the exception of when the projector is positioned on the floor, the safety rope must be fitted. This must be securely fixed to the support structure of the projector and then connected to the fixing point at the centre of the base.

Make sure all parts for fixing the projector are in a good state of repair.
Make sure the point of anchorage is stable before positioning the projector.
When suspending the fixture, ensure that the supporting structure and all hardware used can hold at least 10 times the weight of all the devices they support.

Our company is fully operational in any mounting position, hanging upside-down, side mounted, or set on a flat level surface, etc. Be sure this fixture is kept at least 0.5m (about 1.6feet) away from any flammable materials (decoration etc.).
When clamp mounting; always use and install the supplied safety cable as an added safety measure to prevent accidental damage in the event of a clamp failure. See the

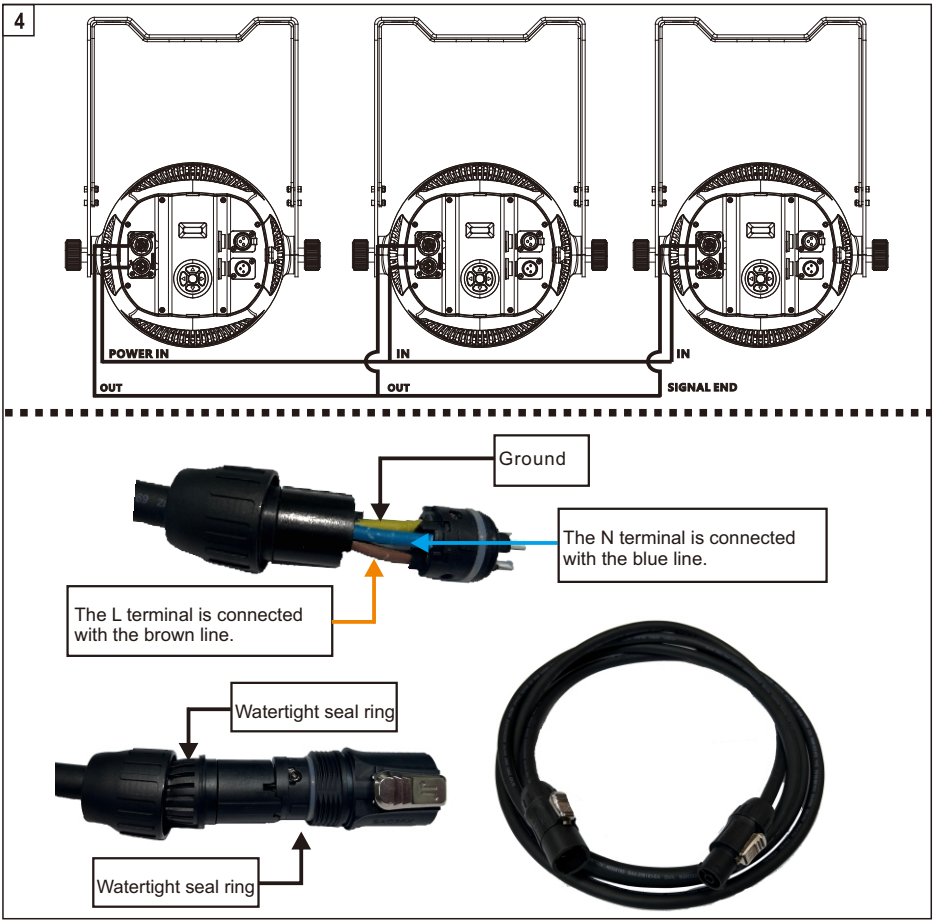

Connecting to the mains suppply ---Fig 4

● connection to the eiectricty mains must be carried out by a qualified electrical installer.

● After doing the above operation and making sure all the devices had been installed with natural operate, press the power switch to check whether every -thing is working normally.

5

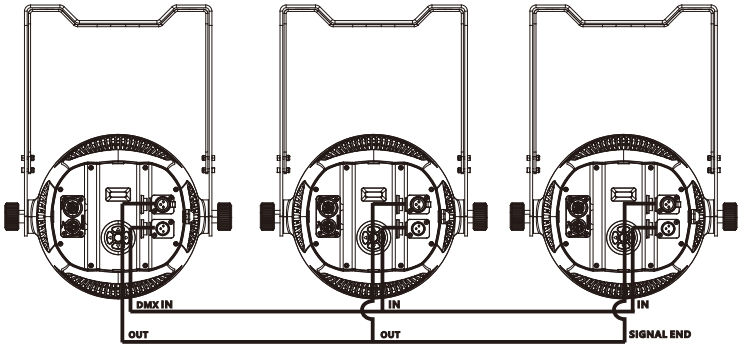

DMX-input

1- Shield
2- Signal (-)
3- Signal (+)
4- Not connected
5- Not connected

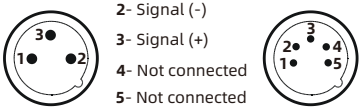

DMX - output

1- Shield
2- Signal (-)
3- Signal (+)
4- Not connected
5- Not connected

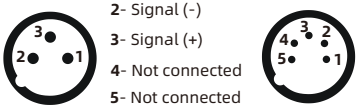

1. At last unit, the DMX cable has to be terminated with a terminator. Solder a 120 Ω 1/4W resistor between pin 2(DMX-) and pin 3(DMX+) into a 3-pin XLR-plug and plug it in the DMX-output of the last unit.
2. Connect the unit together in a "daisy chain" by XLR plug cable from the output of the unit to the input of the next unit. The cable cannot be branched or split to a "Y" cable. DMX 512 is a very high-speed signal. Inadequate or damaged cables, soldered joints or corroded connectors can easily distort the signal and shut down the system.
3. The DMX output and input connectors are pass-through to maintain the DMX circuit, when one of the units' power is disconnected.
4. Each lighting unit needs to have a DMX address to receive the data by the controller. The address number is between 1-512.
5. The end of the DMX 512 system should be terminated to reduce signal errors.
6. 3 pin XLR connectors are more popular than 5 pins XLR.
   3 pin XLR: Pin 1: GND, Pin 2: Negative signal (-), Pin 3: Positive signal (+)
   5 pin XLR: Pin 1: GND, Pin 2: Negative signal (-), Pin 3: Positive signal (+), Pin4, Pin5 not used.

CONTROL PANEL

1

- Up arrowhead : page up
- Down arrowhead : page down
- Left arrowhead : reduce
- Right arrowhead : increase
- Enter : OK function
- Exit : in the choice screen

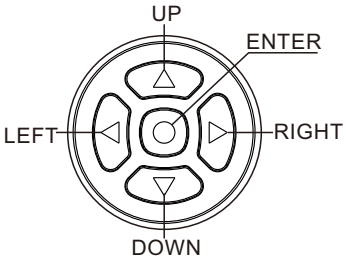

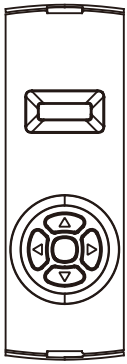

2

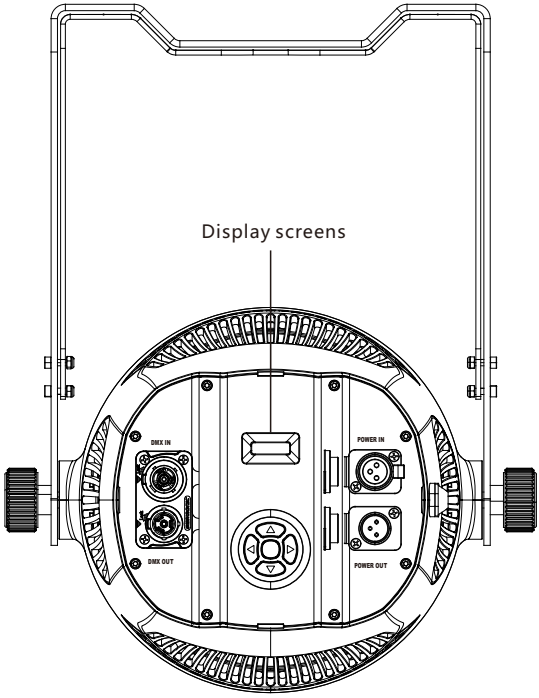

MENU SETTING

Main menu	Ⅰmenu	Ⅱ menu		Ⅲ menu		Ⅳmenu
DMX setting	Address	001 - 512				
	Channel mode	Simple(5)				
		Standard(10)				
	DMX state / DMX	Blackout				
		Hold				
		R ->G ->B ->W				
		C ->M ->Y				
		Scene				
	Scene setting	1.Dimmer	>	0 - 255		
		2.Strobe	>	0 - 255		
		3.Red	>	0 - 255		
		4.Green	>	0 - 255		
		5.Blue	>	0 - 255		
		6.White	>	0 - 255		
		7.Zoom	>	0 - 255		
Info	Fixture times	Power on time	>	0 - 99999H		
		LED on time	>	0 - 99999H		
		All time	>	0 - 99999H		
	Temperatures	-40 - +120 ℃				
	RDM info	0x3888XXXXXXXX				
	Version	VX.XXX				
Person	Led Hz	1200Hz				
		6000Hz				
		12000Hz				
		24000Hz				
	Dimmer Curve	Linear				
		Square				
		I-Square				
		Scurve				
	Dimmer Speed	Fade				
		Snap				
	Display	Backlight time	>	Always		
				Auto (30S)		
		Rotation	>	Normal		
				Rotate		
		Language	>	English		
				Chinese		
	Master Slave	Master				
		Slave				
Manual	Manual Control	1.Dimmer	>	0 - 255		
		2.DimmerF	>	0 - 255		
		3.Strobe	>	0 - 255		
		4.Red	>	0 - 255		
		5.Green	>	0 - 255		
		6.Blue	>	0 - 255		

Main menu		Ⅰmenu		Ⅱ menu		Ⅲ menu		Ⅳmenu
				7.White	>	0 - 255		
				8.Macro	>	0 - 255		
				9.Zoom	>	0 - 255		
				10.CCT	>	0 - 255		
		Reset		Zoom reset				
Service	>	Adjust	>	1.Zoom	>	0 - 255		
		White Balance	>	Red	>	125 - 255		
				Green	>	125 - 255		
				Blue	>	125 - 255		
				White	>	125 255		
		Factory	>	Factory Reset	Password	YES		
						NO		
				Clear timers	>	Power on time	Password	YES
					>			NO
					>	Led on time	Password	YES
					>			NO
					>	All time	Password	YES
					>			NO
				Developer	Password	LOGO	>	
						Manual OR DMX	>	

CHANNEL FUNCTION

channel（Standard 10CH）

Channel	DMX	Percentage	Function	Note
1	0 - 255	0 - 100	Dimmer	
2	0 - 255	0 - 100	DimmerF	
3			Strobe	
	0 - 9		Reserved	
	10 - 199		Strobe-effect from slow to fast	
	200 - 249		Random strobe-effect from slow to	
	250 - 255		Reserved	
4	0 - 255	0 - 100	Red	
5	0 - 255	0 - 100	Green	
6	0 - 255	0 - 100	Blue	
7	0 - 255	0 - 100	White	
8			Color Macro	
	0 - 3		Reserved	
	4 - 255		Color Macro	
9	0 - 255	0 - 100	Zoom	
10	0 - 5		No effect	
	6 - 18		2500K - 2700K	
	19 - 31		2700K - 3000K	
	32 - 44		3000K - 3200K	
	45 - 57		3200K - 3500K	
	58 - 70		3500K - 3700K	
	71 - 83		3700K - 4000K	
	84 - 96		4000K - 4500K	
	97 - 109		4500K - 5000K	
	110 - 122		5000K - 5600K	
	123 - 135		5600K - 6000K	
	136 - 148		6000K - 6500K	
	149 - 161		6500K - 7000K	
	162 - 174		7000K - 7500K	
	175 - 187		7500K - 8000K	
	188 - 200		8000K - 8500K	
	201 - 213		8500K - 9000K	
	214 - 226		9000K - 9500K	
	227 - 254		9500K - 10000K	
	255		10000K	

channel（Simplement 5CH）

Channel	DMX	Percentage	Function	Note
1	0 - 255	0 - 100	Red	
2	0 - 255	0 - 100	Green	
3	0 - 255	0 - 100	Blue	
4	0 - 255	0 - 100	White	
5	0 - 255	0 - 100	Zoom	

Circuit connecting diagram

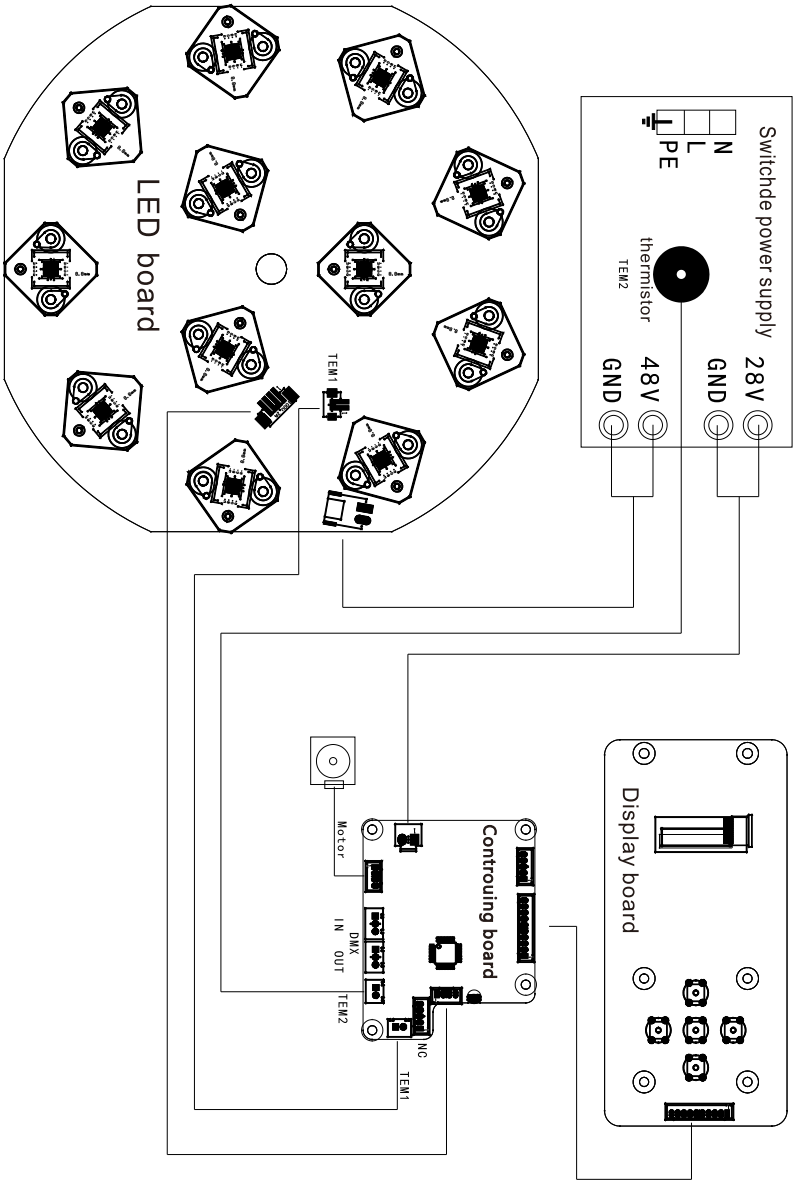

CLEANING AND MAINTENANCES

■1.In order to ensure the projector could work normally. It should be kept clean always . The lens should also be regularly cleaned to maintain an optimum light output. Do not use any type of solvent on lens. It will damage the projector.

■2.Suggestion: The continue usage of the light don't exceed 4 hours. Or it will shorter the usage of the lamp. Please use the alternative operation to solve this problem. The fixture power ON time is best not over 48 hours, or it would generate lamp protection procedure.

■3.Please disconnect the power supply when begin to maintenance take down the light. Please let the parts cool down 10 minute at least then begin to install.

■4.Please inspect the lens or other moving parts timing and keep them clear and static. If find anything damaged or looseness must change a lamp or fix the lamp in order to avoid the accident.
lease check the machenical parts is jamging.After cleaning,please add some temperature -durable juice.

■5.The lamps and lanterns adopt natural heat dissipation.It iseasy for the dirty to be colletced. Please do clear the hot-sak one time two week at least.

■6. After you use the light,please check the intake place whether there are some wastepaper, please clean it up,or the windmill will break down and causing fire.

CAUTION!
Disconnect from mains before starting maintenance operation.

TROUBESHOOTING

It is recommended some solution for some normal trouble shooting. Any inextricability problems should always be handling by the professional person. Disconnect the power supply before maintenance the light.

■ **LED off / LED**:

1.Please check if install the suitable voltage

2.Please check whether the led will reach the end of their life can explode; please replace a same description led.

3.Please check if the power supply is enough.

4.Please check whether the DMX 512 controller pass the "turn on" order.

■**The light couldn't accept the control order:**

1.Please check the start code address and the function option are correct.

2.Please check whether the communicate control cable is on good connection or the cable is too long or interrupt.

3.Please check the control system is not valid, check the signal amplifier of chain connected is valid.

4.Please check whether the communicate cable is too long or the other equipment is mutually conjugate.

5.Please arrange the wire well, shorter the signal cable, put the high voltage cable and low voltage cable separately.

6.Add the signal amplify isolator.

7.Signal cable is used the excellent screening doublet (Resistance 75 OHM)

8.The end of the light end and the end resistance.

■**The light can't move:**

1.Please check if the power supply is suitable for the light voltage data.

2.Please check the light if they are deformation, inside parts is broken, become wet etc will lead the loose contact.

3.Please check the if the iniside lead wire and the connector is loose.

4.Please check the electric parts(such as the transformer,PCB board,contrller) is short-circuit or burn down.

DUTY EXONERATIVE AND COPYRIGHT PROTECTION

◇The Light belongs to consumption products that is not guarantee to keep it in good repair.

◇Any products broken that didn't according to the instruction is not guarantee to keep it in good repair.

◇The commentary for all the instruction belongs to the supplier in final.

◇No authorize can't copy.

◇The information in this manual may be changed in the future,the company reserve the right to change the data without any advise.